Australian Journal of Agricultural Engineering AJAE

AJAE 1(4):149-152 (2010) ISSN:1836-9448

Design, simulation and evaluation of a new universal joint with intersecting angle up to 100 degrees for farm machineries

Majid Yaghoubi*, Ali Jafary, Seyed Saeid Mohtasebi

Department of Agricultural Machinery Engineering, Faculty of Engineering and Technology, University of Tehran, P.O. Box 4111, Karaj 31587-77871, Iran

***Corresponding author: yaghoubi64@gmail.com**

Abstract

This paper introduces a new mechanism which is designed for the transmission of power between two intersecting shafts. The mechanism consists of one drive body and one driven body, six guide arms, and three connecting arms. The intersecting angle between the input body and the output body that are coupled to input and output shafts, can be varied up to 100 degrees while the velocity ratio between the two shafts remains constant. The research also includes a kinematic analysis and a simulation using Visual NASTRAN, Autodesk Inventor Dynamic and COSMOS Motion. The softwares showed that this mechanism can transmit constant velocity ratios at all angles between two shafts. By comparing the graphs of analytical analysis and simulation analysis, validity of equations was proved. Finally, by fabrication and evaluation of the mechanism it was shown that this mechanism can transmit constant velocity practically.

Keywords: Constant velocity, intersecting angle, *Kinematic diagram*, Power transmission, Simulation

Abbreviations: a_2, c, l_c, l_g, t_b *(mm)*_ Dimensions of components; $f(\alpha)$ *(rad)*_Relative angle between guide arm and connecting arm; *K(mm)*_Virtual length of shaft; *k*_Rotating axis of input shaft; l_g*(rad)*_ Length of guide arm; *Point m*_Joint of body and guide arm; *S*_Rotating axis of connecting arm; *s*_Rotating centre of connecting arm; *V(mm³)* _Occupied space; 2α *(rad)*_ Intersecting angle between two shafts; β *(rad)*_ Slope of connecting arm with respect to the vertical line on its surface; γ *(rad)*_ Displacement of input shaft; $\gamma^{\bullet}$ *(rad/s²)*_ Angular velocity of input shaft; θ *(rad)*_ Displacement of connecting arm; $\theta^{\bullet}$ *(rad/s²)*_ Angular velocity of connecting arm

Introduction

Currently, several mechanical, pneumatic, hydraulic and magnetic mechanisms are used to transmit power between two intersecting shafts; however, the mechanical type (universal joint) is mostly used in industry due to its low cost (Hojjati, 2000). Hooke is the in common use joint and categorized into two types: the Cardan and spherical, which have relative intersecting angles of 15 and 45 degrees, respectively. These types of joints are used in equipments with high power transmission; however, the angular velocity of the driven shaft is non-constant. This means that the ratio of output velocity to input velocity is not equal at all angles of rotation (Erdman and Sandor, 1991). As this produces a variable velocity ratio in Hooke joints, some researchers tried to design and manufacture joints of constant velocity ratio as explained in the paragraphs that follow. Rzeppa, in 1933, designed a self-supporting units with inner and outer races drivably connected through balls which had a constant velocity ratio (Rzeppa, 1933), besides another simple joint designed by Bendix; these two types of joints have been used the most in automobiles (Shirkhorshidian, 2004). However, as these two types were not suitable for use in high torque power transmission systems, two Hooke-type universal joints were used in series to overcome this problem (Behroozi Lar, 2003). For low torque power transmission applications such as in toys and some measurement tools, a mechanism with two contact arms was designed that the contact point of the two arms always lie on the homokinetic plane (Shirkhorshidian, 2004). Finally, there are some joints such as Myrad joint, Dodge joint, Lyons joint, Drevard joint, Gilbert joint, James joint, Haruo Mochida joint, Winkler joint and Robert Head joint, which have constant velocity ratios. However, the drawback of these mechanisms is their restricted intersecting angle (except for the James mechanism, the others have intersecting angle less than 45 degrees) and also some of them take up much space (Contreras, 1972; Dodge, 1943; Drevard, 1970; Falk, 1975; Haruo, 1982; Head, 1987; James, 1975; Lynos, 1965; Myrad, 1935; Winkler, 1985). The proposed mechanism can be used between two shafts with an intersecting angle up to 100 degrees. It consists of one drive body and one driven body that are connected to input and output shafts, six guide arms, and three connecting arms. It is dynamically balanced and occupies optimum working space and also its velocity ratio is constant for all intersecting angles between the two shafts.

Materials and methods

Fig. 1 shows a spatial mechanism which is able to transmit motion at a non-constant velocity ratio and motion is transmitted up to 37.5 misalignment. This mechanism has three main components, two ground links (bearings) and four joints. Three joints are cylindrical type and one joint is revolute type (Shirkhorshidian, 2004). Now, if two similar assemblies of this mechanism are connected to each other, a new mechanism with a constant velocity ratio is constructed (Figs.1 (b) and (c)). But it is clear which this mechanism in this manner is not dynamically balanced. Thus, this mechanism cannot transmit power satisfactorily. So it must be modified to have a symmetry arrangement and consequently dynamic balance. To reach this aim and also have a constant velocity joint and operate with non-fluctuating angular velocity, input and output forces and torques must be symmetric with respect to the homokinetic plane (Shirkhorshidian, 2004). To balance the mechanism, three connecting arms and six guide arms are used as shown in Fig. 2. The addition of two extra connecting arms and four guide arms enables the mechanism to retain its symmetry with respect to the homokinetic plane (Fig. 3). This is the first proof for transmitting constant velocity with dynamic balance of the mechanism. The proposed mechanism has 11 main components, 2 ground links (bearing) and 14 joints that five of them are cylindrical type and the others are revolute type. But in fabrication, for connecting the components together, pins and external retaining rings were used. The degree of freedom is:

$$(6\times 13)-(2\times 6)-(5\times 4)-((14-5)\times 5)=1$$

Kinematics analysis of the mechanism

Fig. 4 shows the connecting arm at a relative angle *(f (α))* to the guide arm during rotation. This variable angle is the crucial parameter in analysis of the mechanism, and its value, as shown in Fig. 4, is obtained from following equation.

$$Tan(f(\alpha)) = K.Sin(\gamma).Sin(\alpha)/K.Cos(\alpha)$$
$$f(\alpha) = Tan^{-1}(Cos(\gamma).Tan(\alpha)) \qquad (1)$$

Where: $2\alpha(rad)$ = Intersecting angle between two shafts, $\gamma(rad)$ = Displacement of input shaft, $f(\alpha)(rad)$ = Relative angle between guide arm and connecting arm, *K(mm)*= Virtual length of shaft. Thus, angle between connecting arm and guide arm is equal to *β+f(α).* In rotation, the motion of the connecting arm is non-uniform. As shown in Fig 5, connecting arm motion about the *S* axis is circular with its center at *s*. Axis *k* is the axis of the input body. Thus, in formula (2)

$$\theta=Sin^{-1}\left(\frac{Sin(\beta).Sin(\gamma)}{Sin(\beta+Tan^{-1}(Cos(\gamma).Tan(\alpha)))}\right)$$

$$W=Sin(\beta).Cos(\gamma).Csc(Tan^{-1}(Cos(\gamma).Tan(\alpha))+\beta)$$

$$\dot{\theta}=\frac{W+\dfrac{Sin(\alpha).Sin(\beta).Sin^2(\gamma).Csc(Tan^{-1}(Cos(\gamma).Tan(\alpha))+\beta).Cot(Tan^{-1}(Cos(\gamma).Tan(\alpha))+\beta)}{Sin(\alpha).Tan(\alpha).Cos^2(\gamma)+Cos(\alpha)}}{\sqrt{(-Sin^2(\beta))Sin^2(\gamma).Csc^2(Tan^{-1}(Cos(\gamma).Tan(\alpha))+\beta)+1}}\dot{\gamma}$$

Where: $l_g(mm)$= Length of guide arm, $\beta(rad)$ = Slope of connecting arm with respect to the vertical line on its surface, $\theta(rad)$ = Displacement of connecting arm, $\dot{\theta}(rad/s^2)$ = Angular velocity of connecting arm, $\dot{\gamma}(rad/s^2)$ = Angular velocity of input shaft, *Point m*= Joint of body and guide arm. Equations 2 and 3 are useful for specifying the forces on components by law of conservation of energy and specifying whether the jerk occurs in the mechanism or not.

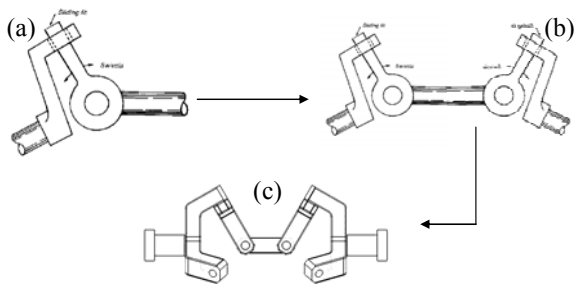

Fig 1. Combining of two nonconstant velocity universal joint for designing a constant speed universal joint

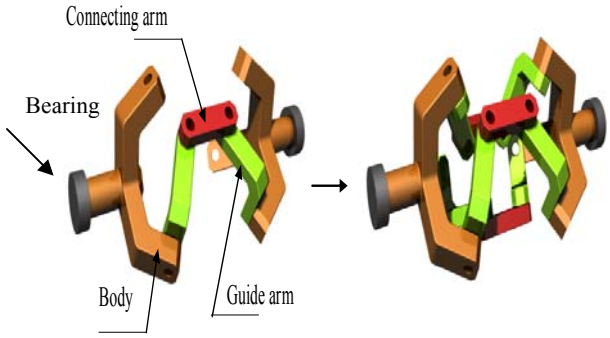

Fig 2. Adding the tow other parts for balancing

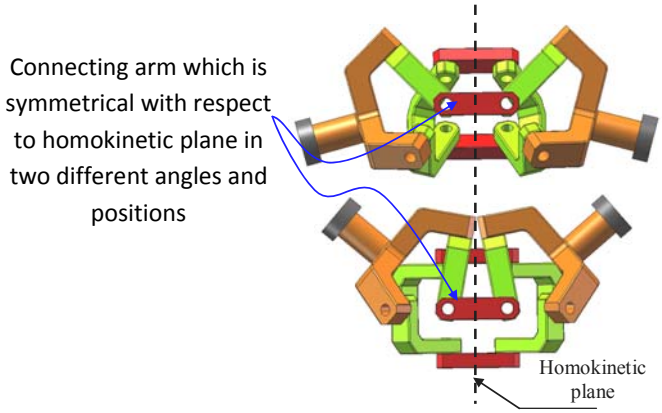

Fig 3. Keeping symmetry of the mechanism with respect to the homokinetic plane

The space (volume) occupied by the mechanism

During rotation, for any intersecting angle between the two shafts, the guide and connecting arms occupy a constant space during rotation. The space occupied by the mechanism is equal to the value obtained from equation (4).

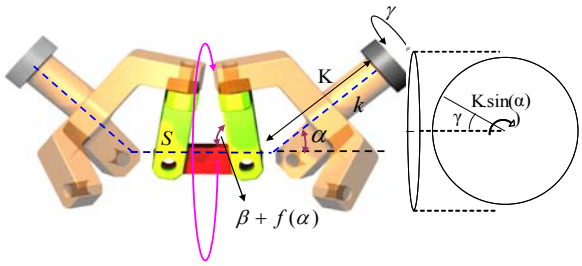

Fig. 4. Relative locus of connecting arm with respect to guide arm

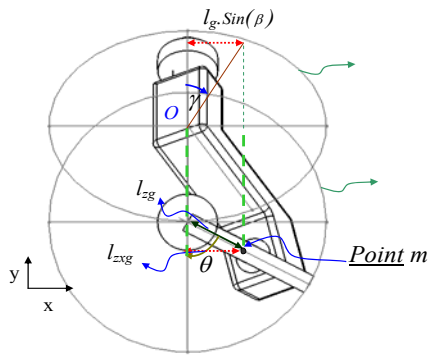

Fig 5. Locus of point m and connecting arm during rotation on rotation plan of the connecting arm

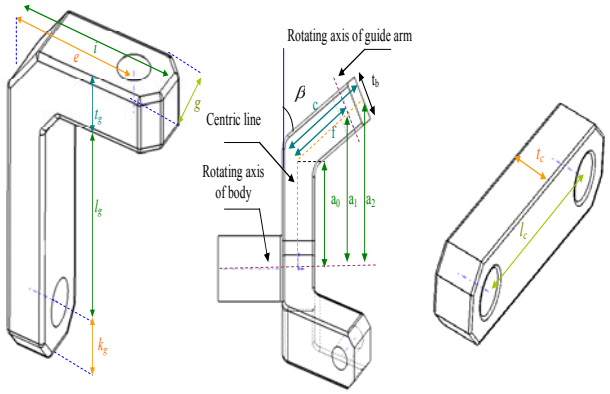

Fig 6. Schematic of components parameters of the mechanism

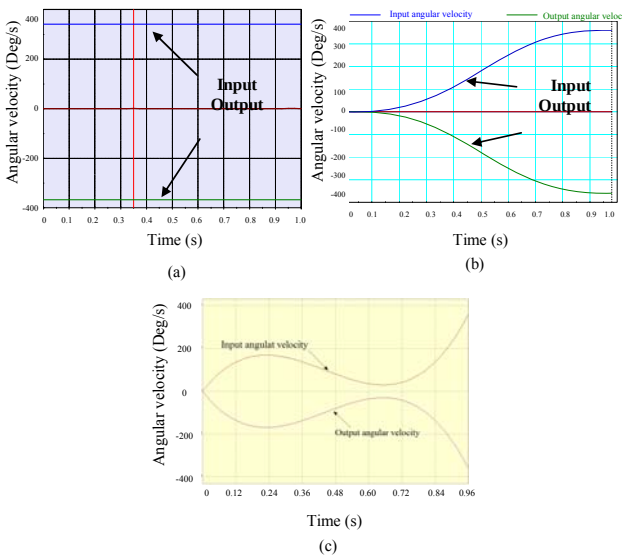

Fig 7. Comparisons between input and output velocities of the mechanism: **(A)** Simulation by Autodesk Inventor software. (**B)** Simulation by COSMOS Motion software. **(C)** Simulation by Visual Nastran software.

$$V = 2\pi(a_2 + t_b.Cos(\beta))^2(c.Sin(\beta) + l_g.Cos(\beta) + \frac{l_c + t_b}{2})$$

(4), Where: V(mm³)= Occupied space, t_b, c, l_c, l_g, a_2*(mm)* = Dimensions of components (Fig. 6)

Results

Simulation and results

The greatest advantage of the proposed mechanism is its constant angular velocity ratio during rotation. As shown in Fig. 3, there is symmetry in all the angles, so the mechanism has constant velocity ratio. Simulations carried out using powerful engineering softwares such as COSMOS Motion, Visual Nastran, and Autodesk Inventor. They confirmed this claim. Their results are shown in Fig. 7. simulations shown in Fig. 7 are (a) at constant angular velocity of π/2 rad/s and in Figs. 7 (b) and (c) with variable velocity of *f(x)*. The output value is negative because of the positions of the input and output axes in the Cartesian coordinate which are reversed in simulation.

Validity of kinematics equation

To approve validity of the equation (2) in materials and methods part, the angular acceleration of connecting arm was drawn by Math software and then was compared with simulation result using COSMOS Motion (Fig. 8). As shown in Fig. 8, the plots of analytical and simulation analysis are the same. Variable acceleration might cause jerking, but Fig. 8 shows that the slope angle of graph for angular acceleration of the connecting arms in intersecting angle of 100 degrees (in the mechanism, high oscillation acceleration occurs at high intersecting angle) is not 90 degrees; therefore, no jerk takes place in the system.

Evaluating the mechanism

For evaluating the mechanism whether it can transmit the constant velocity up to 100 degrees or not the mechanism was fabricated and evaluated by a tracer lathe. Because the tracer lathe could supply a constant input angular velocity during

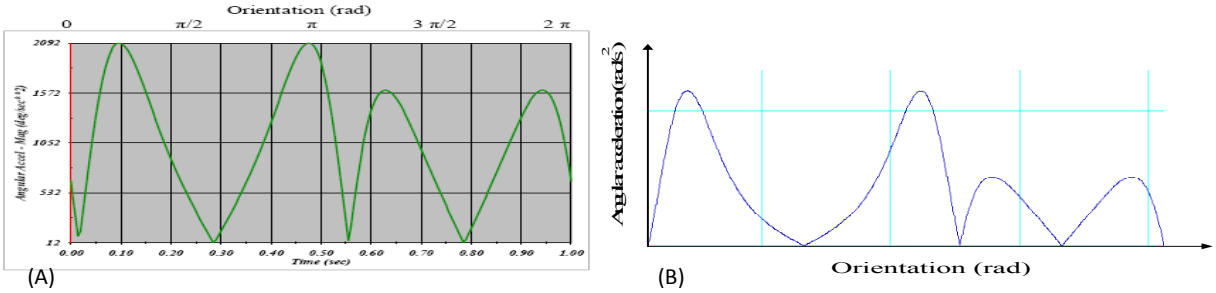

Fig 8. Comparing the results of analytical and simulation analysis. (A) Simulation analysis. (B) Analytical analysis

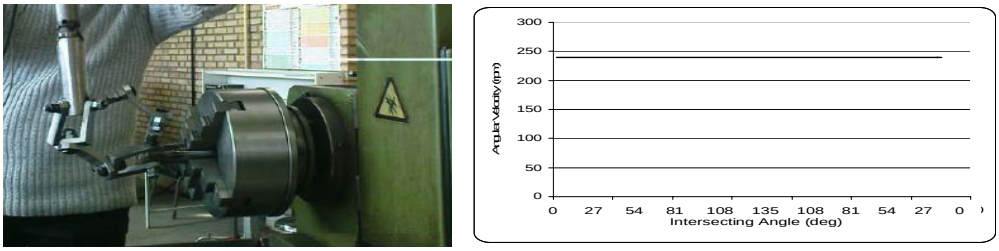

Fig 9. Experimental setup and evaluating results of the mechanism

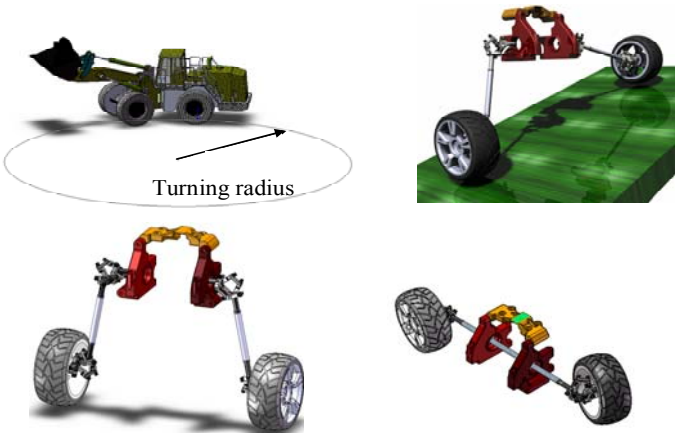

Fig 10. The applications of mechanism on automobiles

testing, the input body was coupled to three-jaw chuck of tracer lathe and output shaft was coupled to a speedometer sensor. The input velocity was chosen 240 rpm and during rotation the intersecting angle was varied from 0 up to 100 degrees and vice versa. During the test all data was recorded by a data logger and then transferred to a computer. As shown in Fig. 9, the results of evaluating illustrates the output velocity is equal to input velocity.

Conclusion

The proposed mechanism has a constant velocity ratio and transmits power between two intersecting shafts at angles up to 100 degrees. The results showed that this mechanism can transmit constant velocity with high deflection. This mechanism can be used wherever the transmitting power in high intersecting angle shafts is required. Including applications of the mechanism is on automobiles and tractors axle shafts, to decrease of turning radius, to increase the height adjustment range etc (Fig. 10).

References

Behroozi Lar M (2003). The Principles of Agricultural Machinery Design (translation). Islamic Azad University, Tehran, Iran

Contreras G (1972) Universal joint. United State Patent. Patent No. 3,633,044

Dodge A (1943) Universal joint. United State Patent. Patent No. 2, 322, 5

Drevard E (1970) Universal joint. United State Patent. Patent No. 3,613,396

Erdman G, Sandor G (1991) Mechanism Design. Prentice Hall, New York

Falk J (1975) Universal joint. United State Patent .Patent NO 3,924,420

Haruo M (1982) Universal joint. United State Patent .Patent NO 4,365,488

Head R (1987) Universal joint. United State Patent. Patent NO 4,695,227

Hojjati M (2000) Design of Machine. University of Mazandaran, (in Persian)

James B (1975) Universal joint. United State Patent .Patent NO 3,924,420

Lynos J (1965) Universal joint. United State Patent. Patent NO 3,178,907

Myrad F (1935) Universal joint. United State Patent. Patent NO 2,026,244

Rzeppa A (1933) Universal joint. United State Patent. Patent NO 1, 916,442

Shirkhorshidian A (2004) Design of mechanisms for designer and machine makers, Nashretarrah

Winkler O (1985) Universal joint. United State Patent. Patent NO 4,511,345